www.reelschematic.com

Daiwa
COMMITTED TO TOTAL QUALITY

SPINNING REEL GS1055/1355

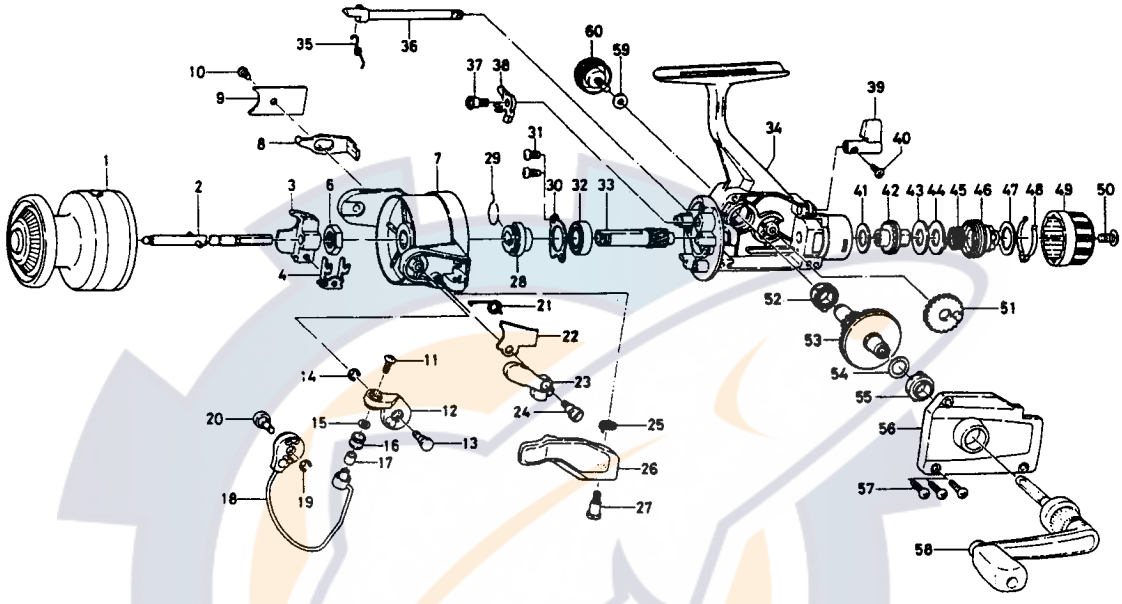

Key No.	Parts No.	Parts Name
1	E08-4302	Spool assembly*
2	B83-4501	Main shaft
3	B97-9601	Oscillating slider
4	B97-9701	Oscillating slider retainer
6	B67-9401	Rotor nut
7	B81-8301	Rotor
8	B83-4301	Bail trip lever
9	B74-7303	Bail trip cover
10	B83-4402	Bail trip cover screw
11	B67-9302	Line roller screw
12	B67-4601	Bail arm
13	B83-3801	Bail arm screw
14	320-5901	Bail arm screw retainer
15	B55-4301	Line roller washer
16	250-3921	Line roller
17	B45-1501	Line roller bushing
18	B83-4001	Bail
19	320-5901	Bail trip cam screw retainer
20	B83-4201	Bail trip cam screw
21	B83-3701	Bail spring
22	B83-3901	Bail spring cover
23	B67-4901	Trigger plate
24	B68-8801	Bail spring cover screw
25	B67-5201	Trigger spring
26	B67-5105	Trigger lever
27	B68-8802	Trigger screw
28	B83-5601	Anti-reverse ratchet
29	145-0501	Anti-reverse pawl spring
30	B45-6401	Bearing retainer
31	B83-4402	Bearing retainer screw
32	634-1301	Ball bearing
33	B83-3501	Pinion gear
34	E08-3401	Body*

* 1986 Reel Model

Key No.	Parts No.	Parts Name
35	B44-8501	Anti-reverse cam spring
36	B44-8401	Anti-reverse cam
37	B61-8101	Anti-reverse pawl screw
38	B90-3001	Anti-reverse pawl
39	E08-3701	Anti-reverse lever
40	B12-8201	Anti reverse lever screw
41	B48-9901	Drag washer A
42	B83-3602	Click gear
43	B76-0501	Drag washer B
44	B49-0102	Eared washer
45	B92-6703	Drag coil spring
46	B74-7603	Drag screw
47	B90-8201	Drag washer C
48	B74-7702	Drag washer spring
49	B82-5507	Drag knob
50	352-1105	Drag knob spring screw
51	B74-2501	Oscillating gear
52	B84-3901	Bushing
53	B83-4701	Drive gear
54	373-7800	Drive gear washer
55	B84-3901	Bushing
56	E08-4001	Side cover*
57	B83-5002	Side cover screw
58	E00-1602	Handle
59	B92-4902	Handle lock washer
60	B92-5001	Handle lock screw

GS1355 Special Parts		
1	E08-5102	Spool*
7	B81-8501	Rotor
8	B83-5701	Bail trip lever
18	B83-7601	Bail
34	E08-3402	Body*
56	E08-4003	Side cover*